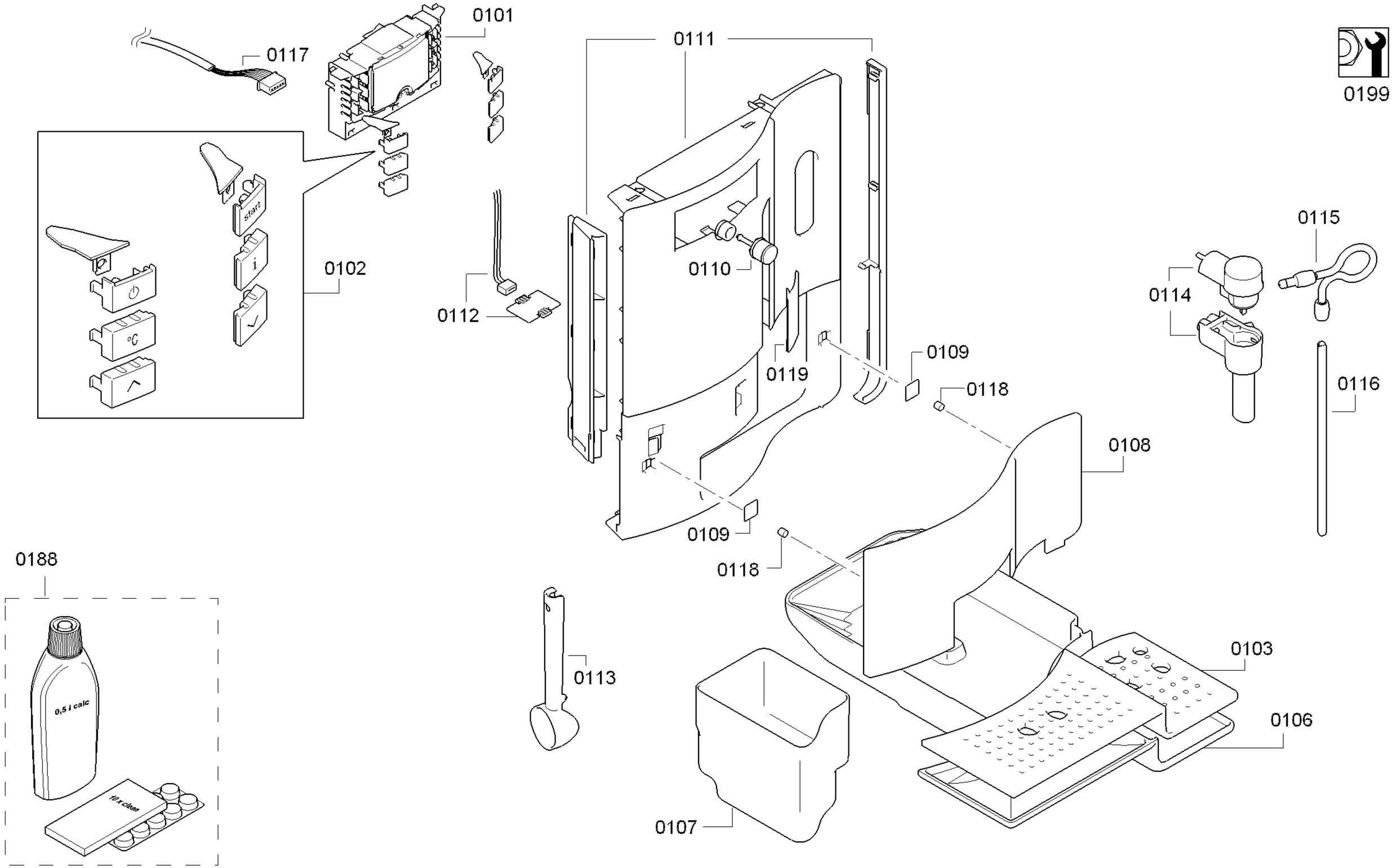

Copyright © (2014) by Bosch / SERRU_200100481_1

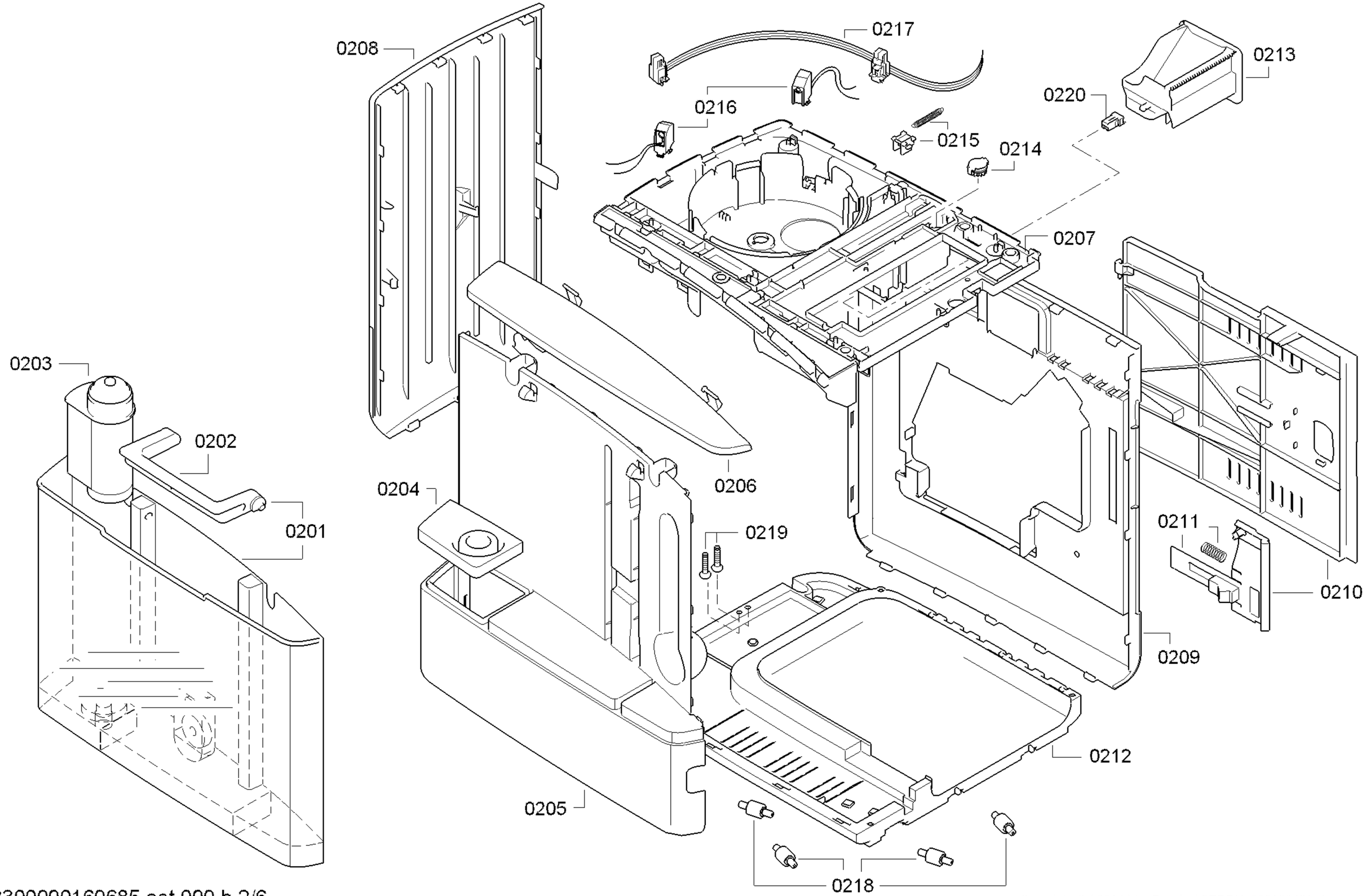

58300000160685 aet 000 b 2/6

Copyright © (2014) by Bosch / SERRU_200100481_1

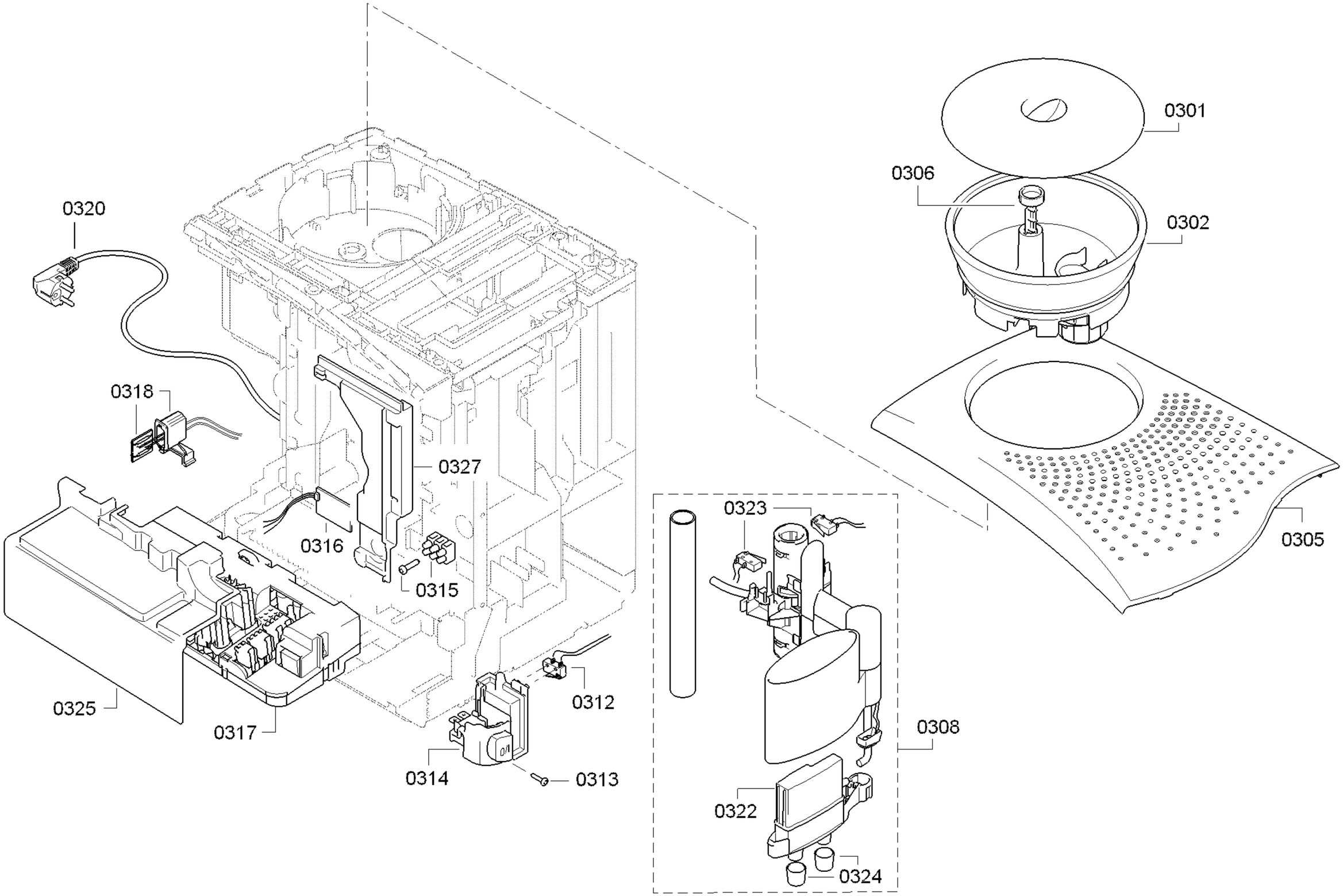

Copyright © (2014) by Bosch / SERRU_200100481_1

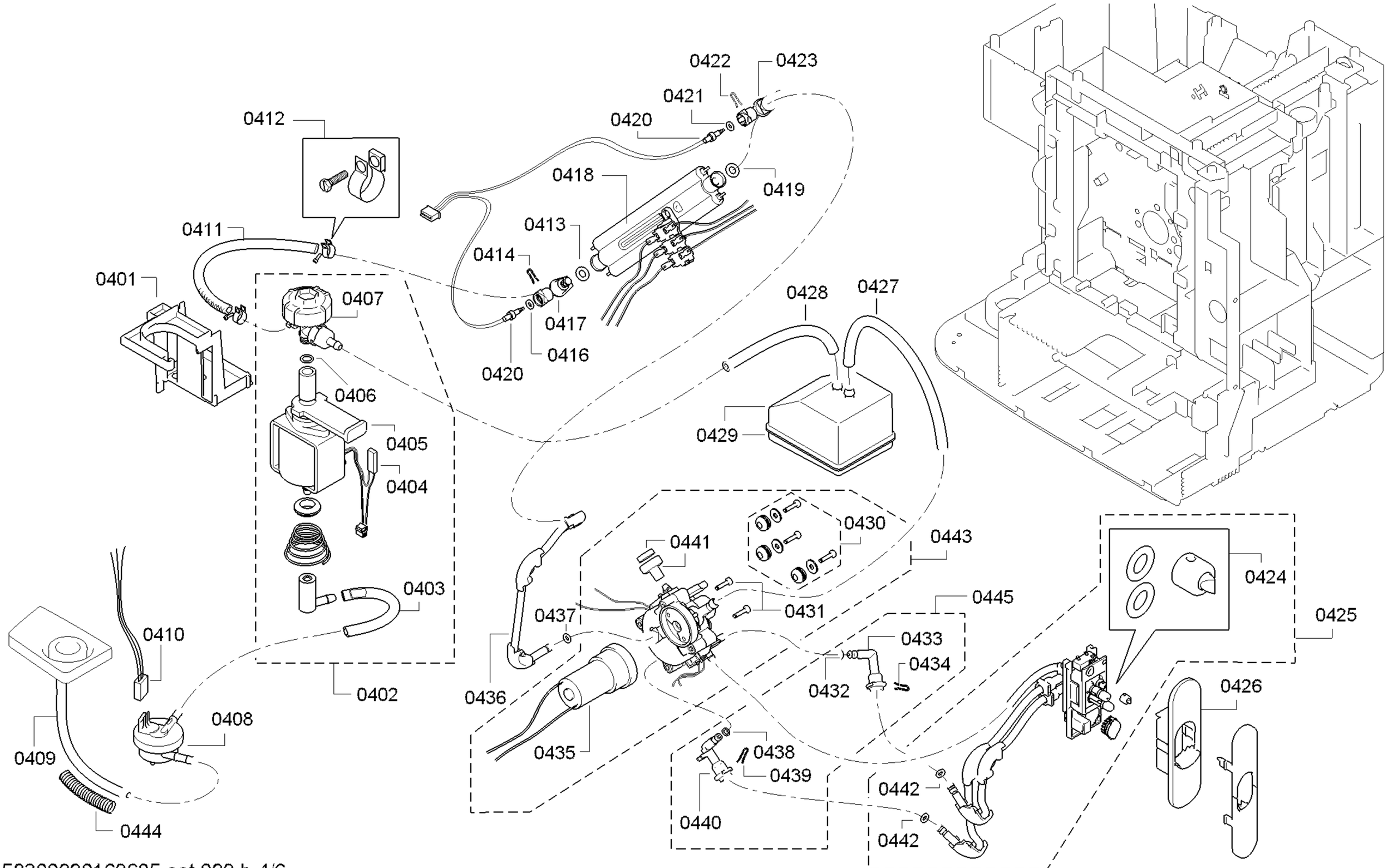

Copyright © (2014) by Bosch / SERRU_200100481_1

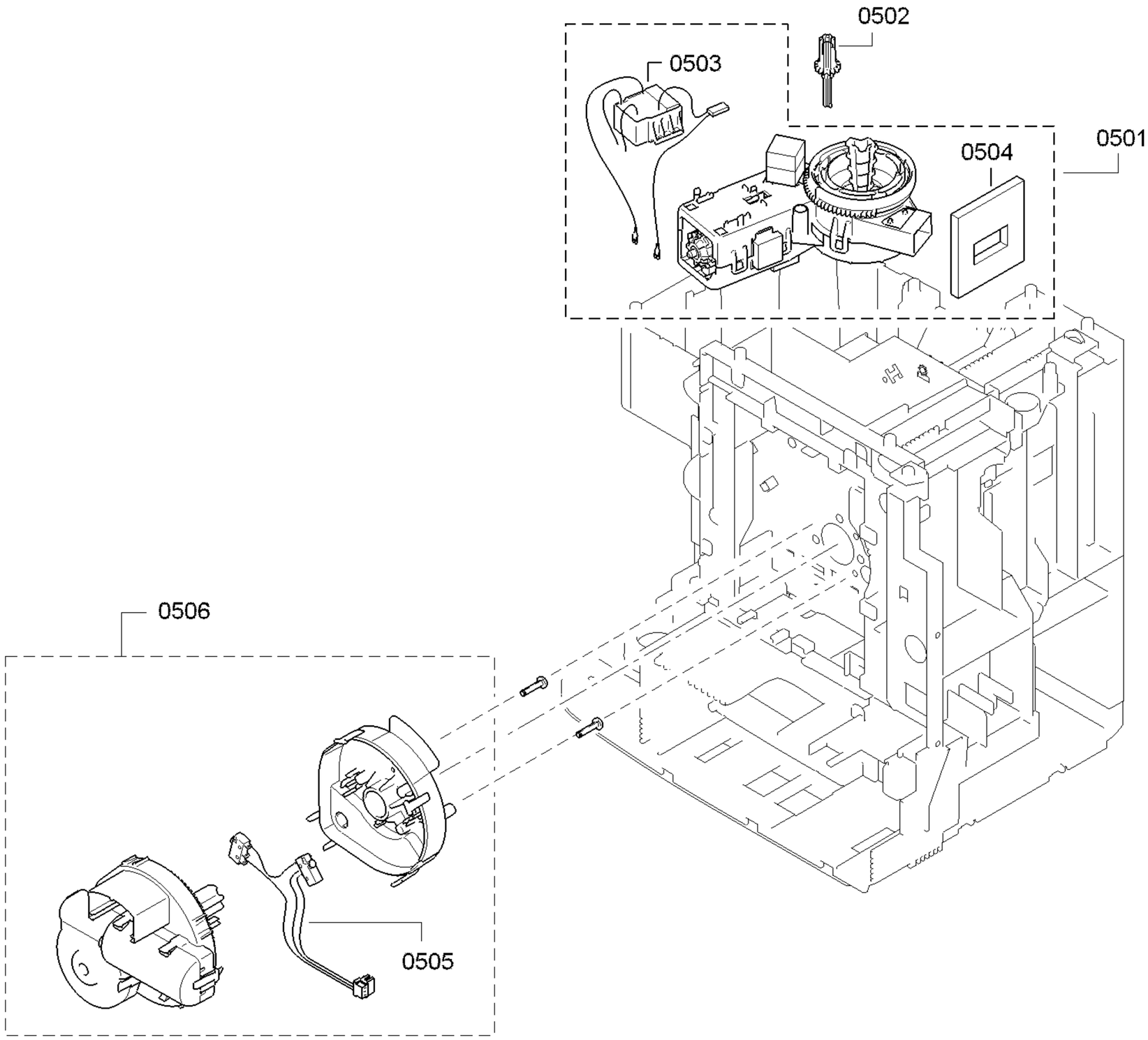

Copyright © (2014) by Bosch / SERRU_200100481_1

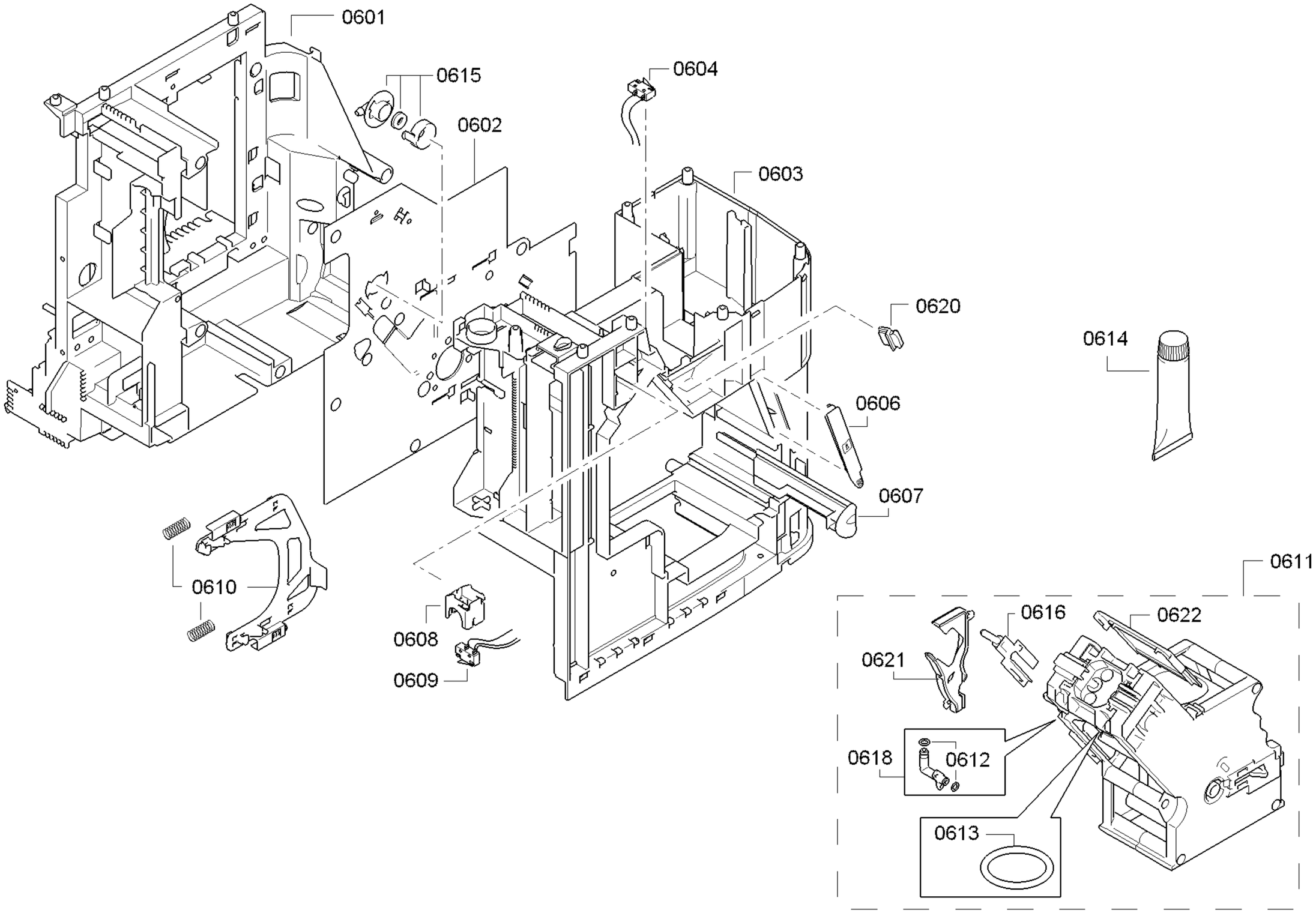

Copyright © (2014) by Bosch / SERRU_200100481_1